GAS VALVE 8205 HONEYWELL

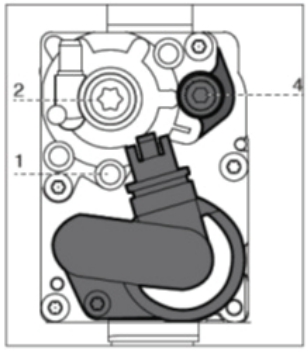
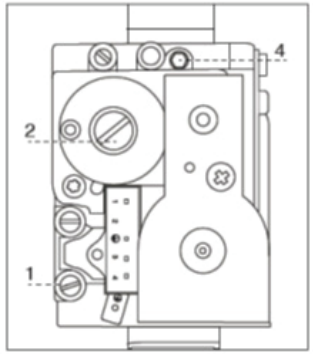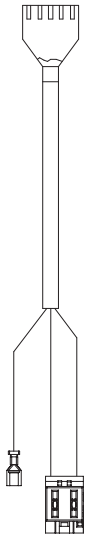
GAS VALVE 848 SIT