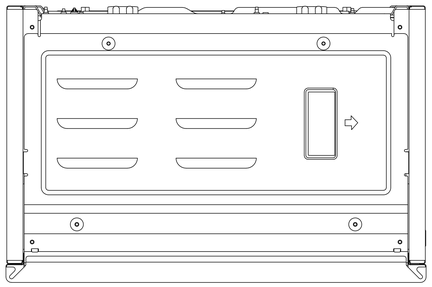

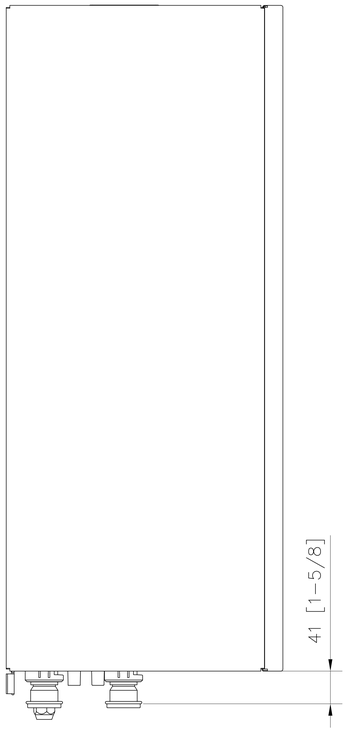
41 [1-5/8]

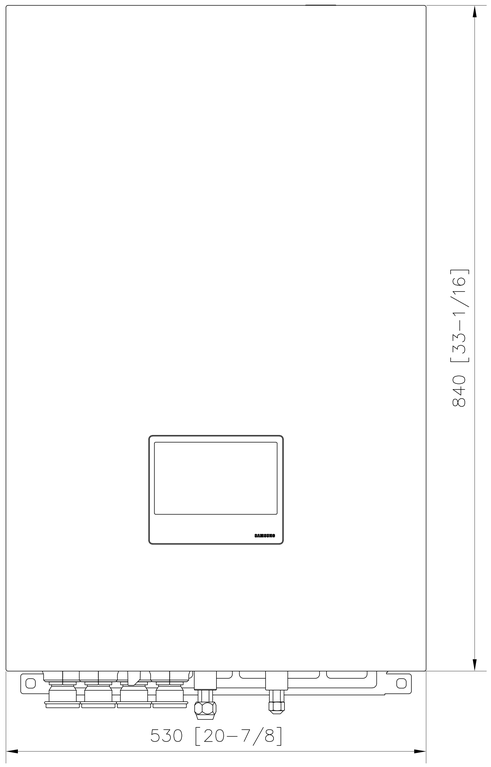
840 [33-1/16]
530 [20-7/8]

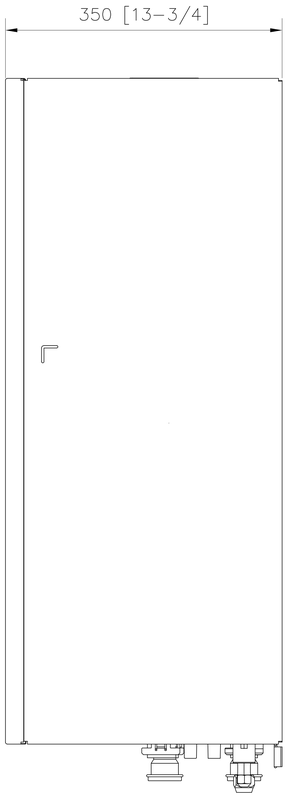
350 [13-3/4]

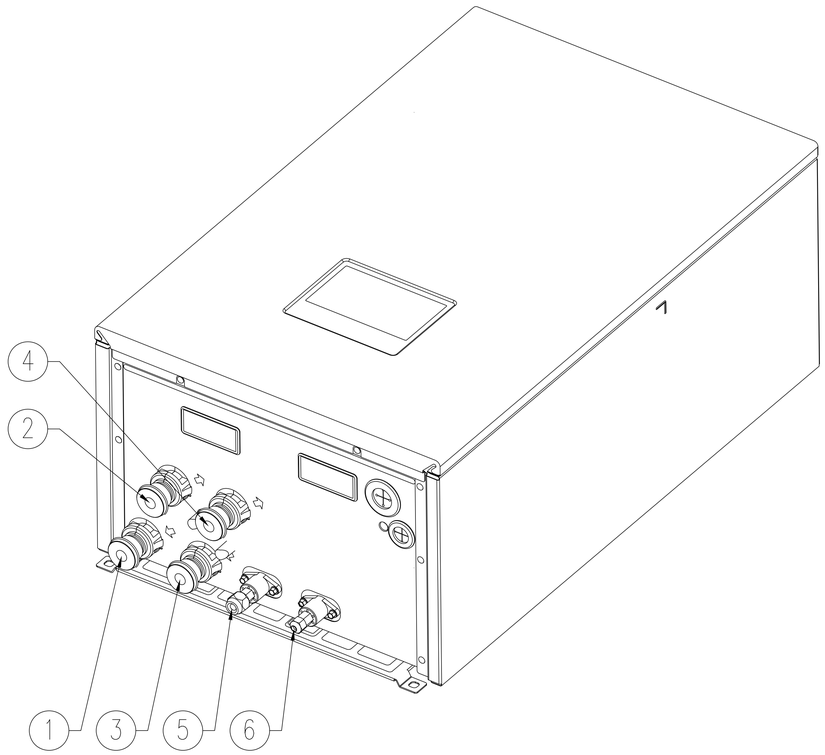
4
2
1
3
5
6

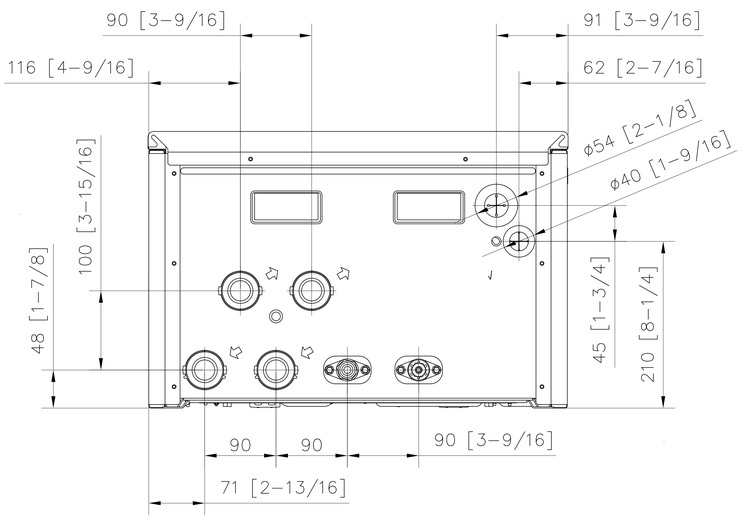
90 [3-9/16]
116 [4-9/16]
91 [3-9/16]
62 [2-7/16]
ϕ54 [2-1/8]
ϕ40 [1-9/16]
100 [3-15/16]
48 [1-7/8]
45 [1-3/4]
210 [8-1/4]
90
90
90 [3-9/16]
71 [2-13/16]