5. Dimensional Drawing

Outdoor Unit

AR70H18C1AWXEU, AR70H24C1AWXEU

Unit: mm [inch]

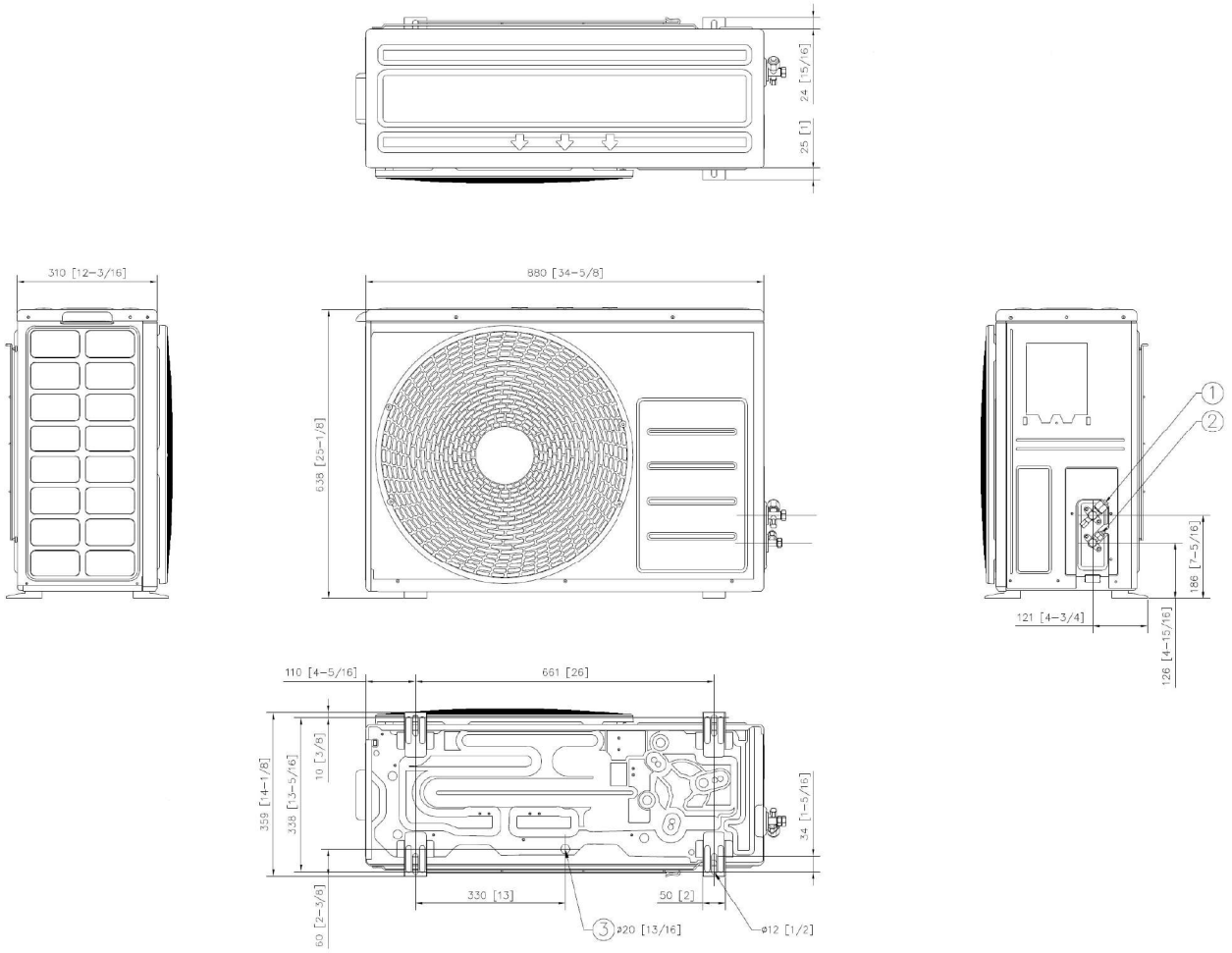

No.	Name	Description	
		AR70H18C1AWX	AR70H24C1AWX
1	Gas pipe connection	12.7	15.88
2	Liquid pipe connection	6.35	
3	Drain pipe connection	-	